SUPERVIZOR
D.R.D.P. TIMIŞOARA
**BUN DE EXECUȚIE**
DATA: 01.04.2022

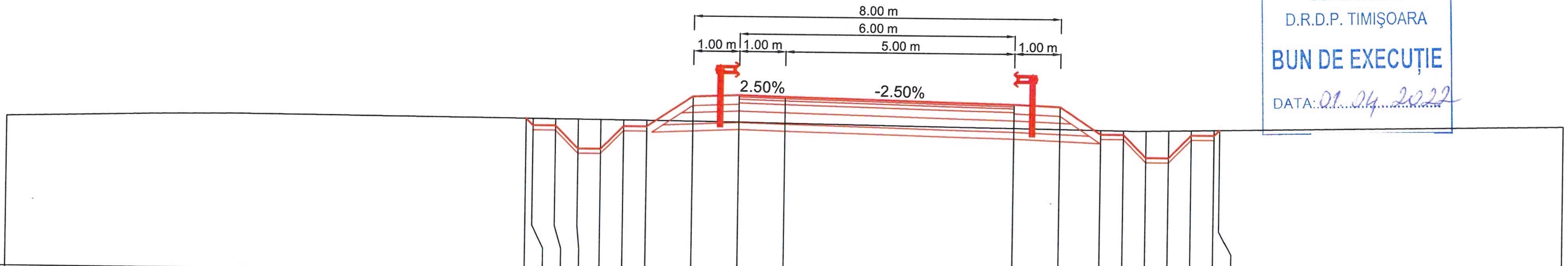


R.L. = 92.00

| | | | | | | | | | | | | | | | | | | | | | |
|---|---|---|---|---|---|---|---|---|---|---|---|---|---|---|---|---|---|---|---|---|---|
| COTE PROIECT | | 95.33 | 95.17 | 95.17 | 94.67 | 94.67 | 95.17 | 95.17 | 95.84 | 95.88 | 95.85 | 95.73 | 95.69 | 95.10 | 95.10 | 94.60 | 94.60 | 95.10 | 95.10 | 95.22 | |
| COTE TEREN | 95.27 | 95.33 | 95.33 | 95.32 | 95.32 | 95.32 | 95.31 | 95.31 | 95.31 | 95.29 | 95.28 | 95.22 | 95.20 | 95.19 | 95.18 | 95.18 | 95.19 | 95.20 | 95.21 | 95.22 | 95.36 |
| DISTANTE | -17.00 | -5.65 | -5.50 | -5.00 | -4.50 | -4.00 | -3.50 | -3.00 | -2.00 | -1.00 | 0.00 | 5.00 | 6.00 | 6.89 | 7.39 | 7.89 | 8.39 | 8.89 | 9.39 | 9.51 | 17.00 |

KM = 440.00

SOCIETATEA COMERCIALĂ TOTAL ROAD S.R.L. BUCUREŞTI - ROMÂNIA

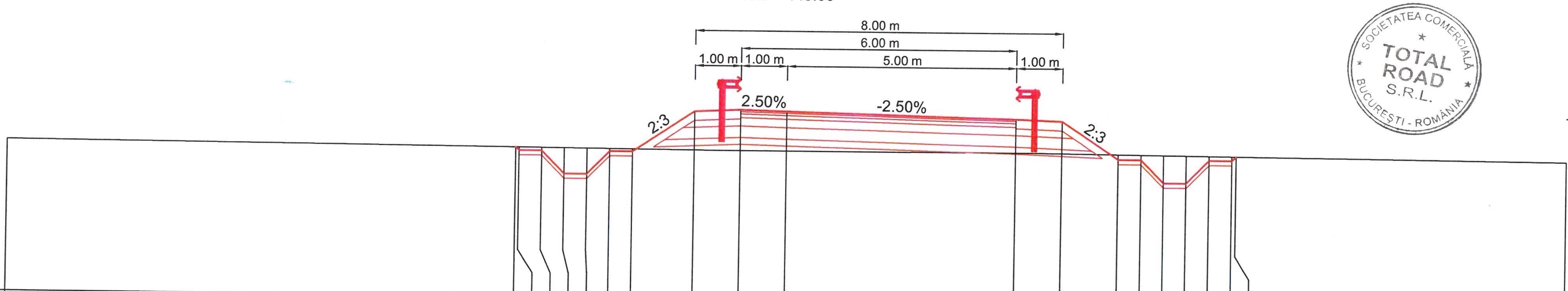


R.L. = 92.00

| | | | | | | | | | | | | | | | | | | | | | |
|---|---|---|---|---|---|---|---|---|---|---|---|---|---|---|---|---|---|---|---|---|---|
| COTE PROIECT | | 95.23 | 95.15 | 95.15 | 94.65 | 94.65 | 95.15 | 95.15 | 96.04 | 96.08 | 96.06 | 95.93 | 95.89 | 95.08 | 95.08 | 94.58 | 94.58 | 95.08 | 95.08 | 95.17 | |
| COTE TEREN | 95.29 | 95.23 | 95.23 | 95.22 | 95.22 | 95.22 | 95.21 | 95.21 | 95.20 | 95.20 | 95.20 | 95.20 | 95.20 | 95.19 | 95.18 | 95.18 | 95.18 | 95.17 | 95.17 | 95.17 | 95.11 |
| DISTANTE | -17.00 | -5.90 | -5.83 | -5.33 | -4.83 | -4.33 | -3.83 | -3.33 | -2.00 | -1.00 | 0.00 | 5.00 | 6.00 | 7.22 | 7.72 | 8.22 | 8.72 | 9.22 | 9.72 | 9.81 | 17.00 |

KM = 420.00

**BENEFICIAR:** COMPANIA NATIONALA DE ADMINISTRAREA INFRASTRUCTURII RUTIERE S.A. (C.N.A.I.R. S.A.)

**ANTREPRENOR:** TODINI CONSTRUZIONI GENERALI S.p.A.

**TITLU PROIECT:** PROIECTARE SI EXECUȚIE „DRUM DE LEGĂTURĂ AUTOSTRADA A1 ARAD - TIMIȘOARA - DN 69"

| FAZA PROIECT | CONTRACT NR. | PROIECT NR. |
|---|---|---|
| PROIECT TEHNIC DE EXECUTIE (P.T.E.) | 92/7703/01.02.2021 | 08/2021 |

| SPECIFICATIE | NUME | SEMNATURA |
|---|---|---|
| DESENAT | Teh. Sorin VASILACHE | |
| PROIECTAT | Ing. Mihai COROIAN | |
| SEF PROIECT | Ing. Catalin GRUIANU | |
| VERIFICAT | Ing. Adrian NISTOR | |

| DATA | MĂRIMEA | SCARĂ |
|---|---|---|
| Martie 2022 | A3 | 1:100 |

**TITLU PLANSA:** LUCRARI DE INFRASTRUCTURA RUTIERA
PROFILURI TRANSVERSALE CURENTE
NOD DC58 - BRETEA 4

| NUMAR PLANSA: | PICHET |
|---|---|
| PTC - 467 | - |

| Revizie | | |
|---|---|---|
| NR. | DATA | DESCRIERE |
| 0 | 08.2021 | Emitere P.T.E. |
| 1 | 09.2021 | Conf. nr.290/DLA1-224 |
| 2 | 02.2022 | Conf. ASR 92/93833 |